16mm 35mm

BUILDING FILE

Code No. 357/5

Subject Dwg
Sundeck

Permit No R. 1792
27975

Date 22/6/67
14/5/86

No. Sheets 3

Document Set ID: 404184
Version: 1, Version Date: 04/04/2006

357/5

C 43

27 Oct. 1967

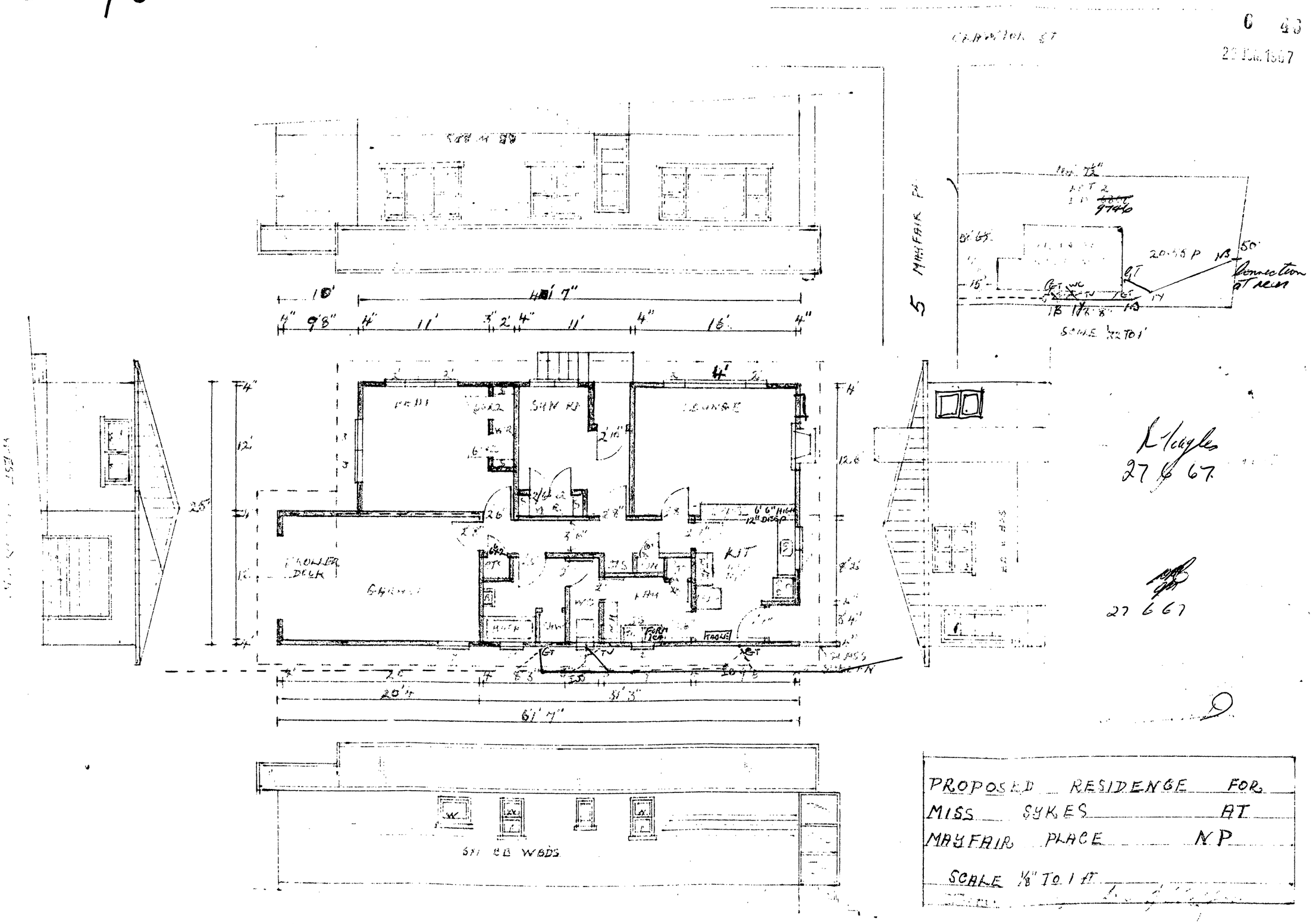

27 6 67

27 6 67

PROPOSED RESIDENCE FOR
MISS SYKES AT
MAYFAIR PLACE N.P

SCALE 1/8" TO 1 FT

357/5

NOTE : 1. Block V Paritutu Survey District being Lot 2 on Deposited Plan 9746 and being Part Sec. 28 Fitzroy District.

E. No.	
JOB No.	

5 20

6 MAY 1986

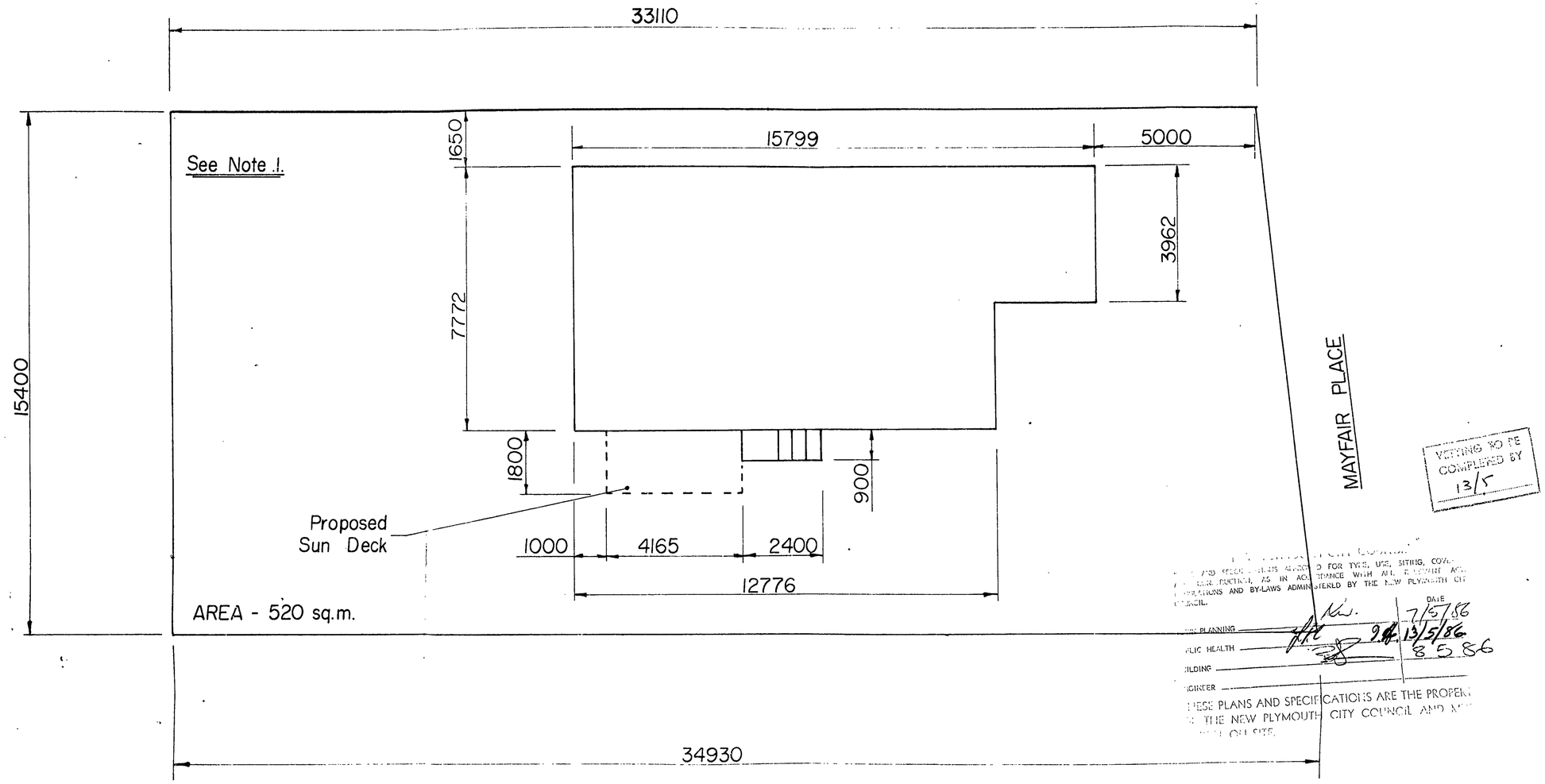

VETTING TO BE COMPLETED BY 13/5

[illegible] AND [illegible] PLANS ACCEPTED FOR TYPE, USE, SITING, COVE[illegible] CONSTRUCTION, AS IN ACCORDANCE WITH ALL RELEVANT ACTS, REGULATIONS AND BY-LAWS ADMINISTERED BY THE NEW PLYMOUTH CITY COUNCIL.

		DATE
[illegible] PLANNING		7/5/86
PUBLIC HEALTH		13/5/86
BUILDING		8 5 86
ENGINEER		

THESE PLANS AND SPECIFICATIONS ARE THE PROPERTY OF THE NEW PLYMOUTH CITY COUNCIL AND MUST BE KEPT ON SITE.

ISSUE	AMENDMENT
A	
B	
C	
D	
E	

PROPOSED SUNDECK for Mr & Mrs H.T. WESTON of 5 MAYFAIR PLACE NEW PLYMOUTH
SITE LAYOUT

SCALE	1:100	
DESIGNED		
DRAWN	S. RICHARDSON	2-5-86
CALCS. CHECKED		
DIMS. CHECKED		
APPROVED		

ROBT. STONE & CO. LTD.
NEW ZEALAND
A2

DIVISION C

357/5

E. No.	
JOB No.	

5 20

6 MAY 1986

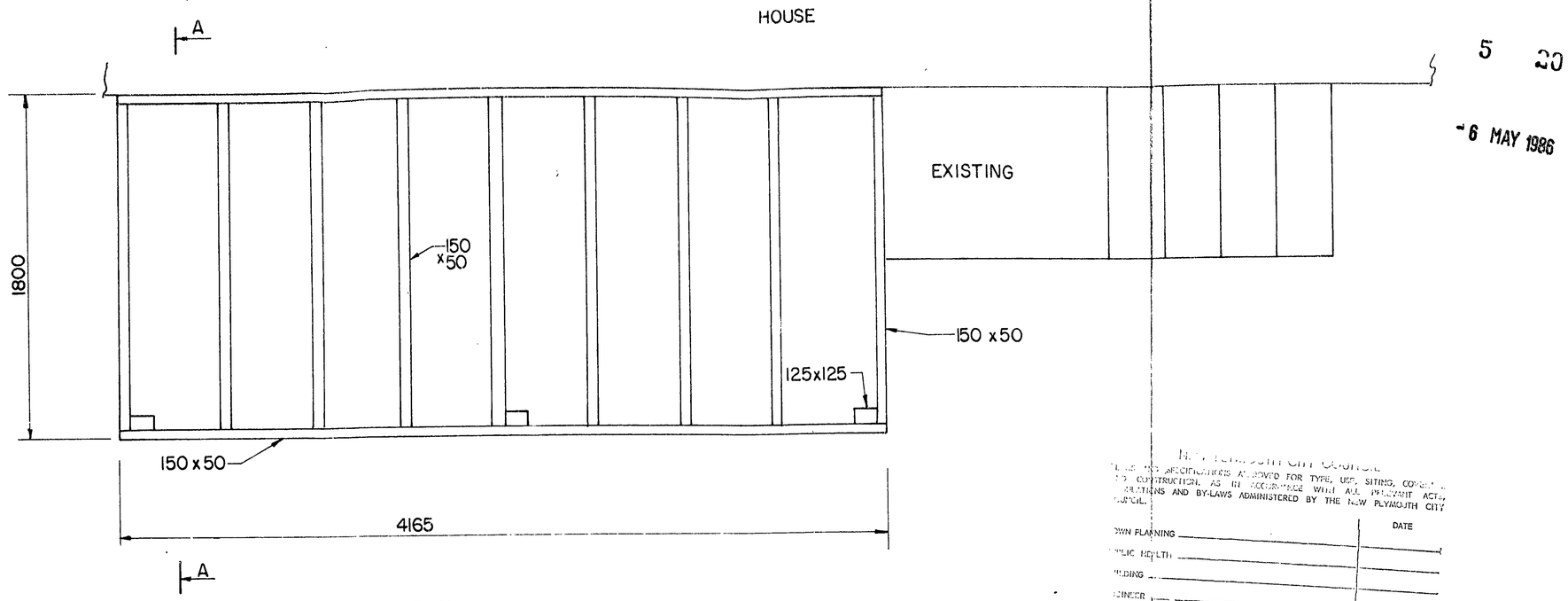

PLAN

NEW PLYMOUTH CITY COUNCIL

THESE PLANS AND SPECIFICATIONS ARE APPROVED FOR TYPE, USE, SITING, CONSTRUCTION, AS IN ACCORDANCE WITH ALL PRESENT ACTS, REGULATIONS AND BY-LAWS ADMINISTERED BY THE NEW PLYMOUTH CITY COUNCIL.

	DATE
TOWN PLANNING	
PUBLIC HEALTH	
BUILDING	
ENGINEER	

THESE PLANS AND SPECIFICATIONS ARE THE PROPERTY OF THE NEW PLYMOUTH CITY COUNCIL AND MUST BE RETURNED ON REQUEST.

MATERIAL

DECK JOISTS - 150 x 50 T/PINE
PILES - 125 x 125 T/PINE
DECKING - 100 x 32 HARDWOOD

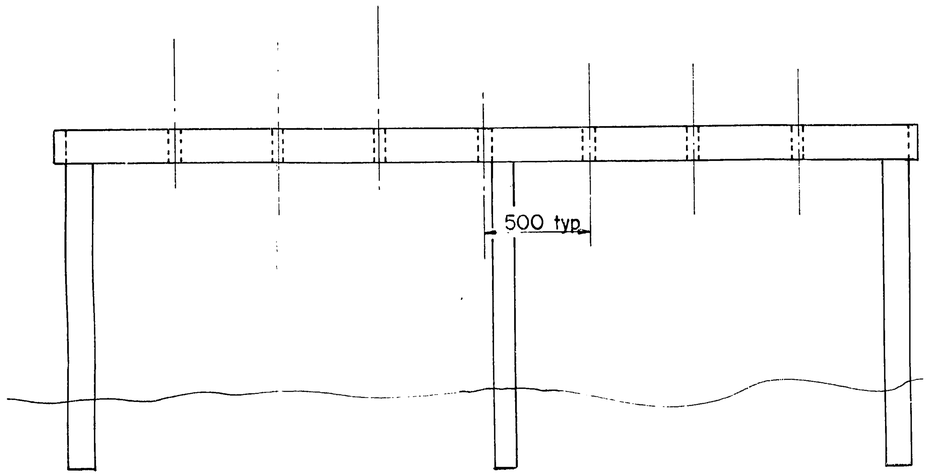

ELEVATION

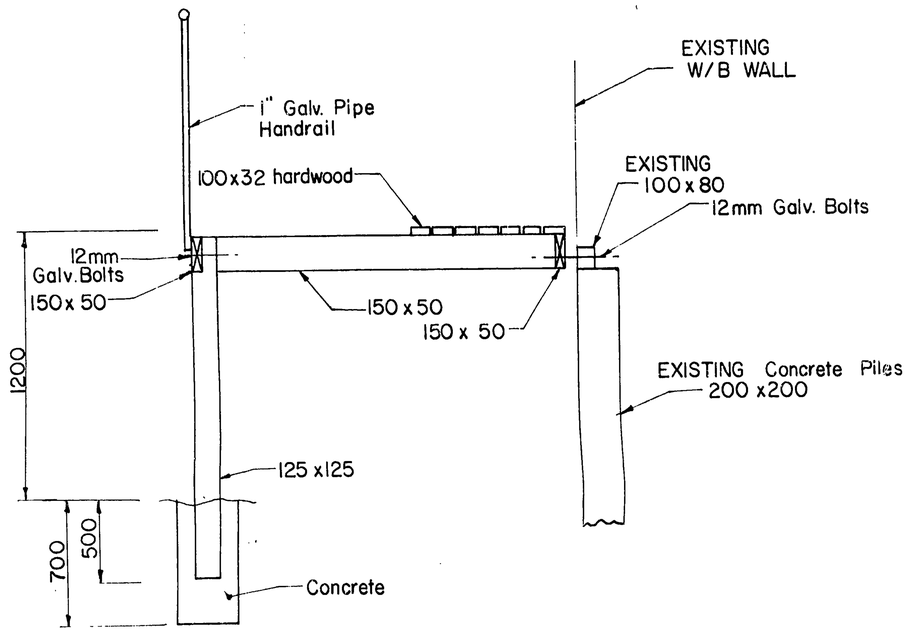

SECTION A–A

ISSUE	AMENDMENT
A	
B	
C	
D	
E	

PROPOSED SUNDECK for Mr & Mrs H.T WESTON of
5 MAYFAIR PLACE NEW PLYMOUTH
SUNDECK DETAILS

SCALE	1:20	
DESIGNED		
DRAWN	S. RICHARDSON	2.5-86
CALCS. CHECKED		
DIMS. CHECKED		
APPROVED		

ROBT. STONE & CO. LTD
NEW ZEALAND
A2

DIVISION C